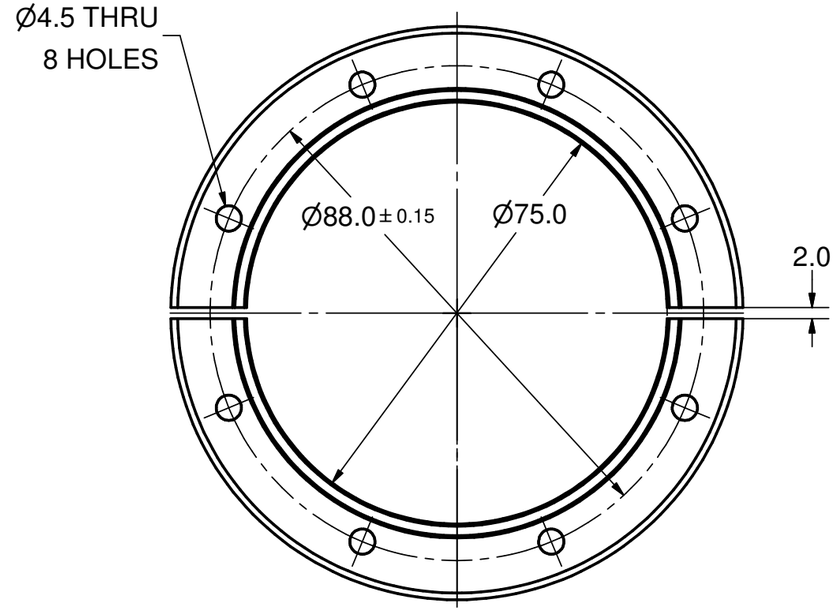

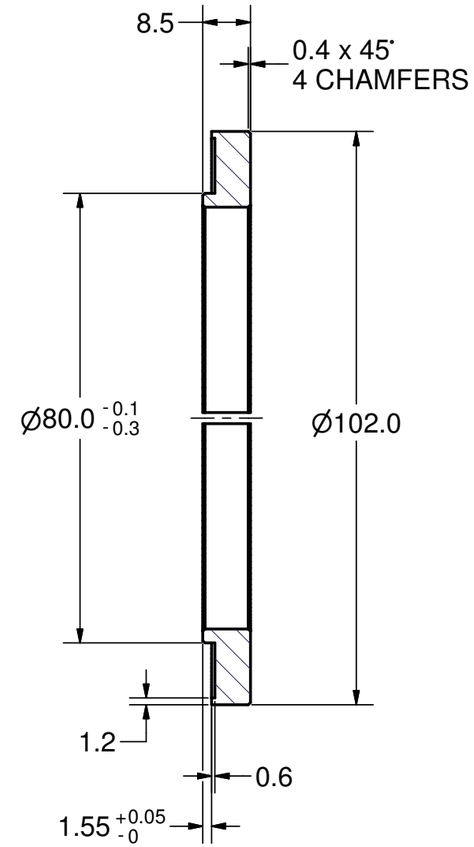

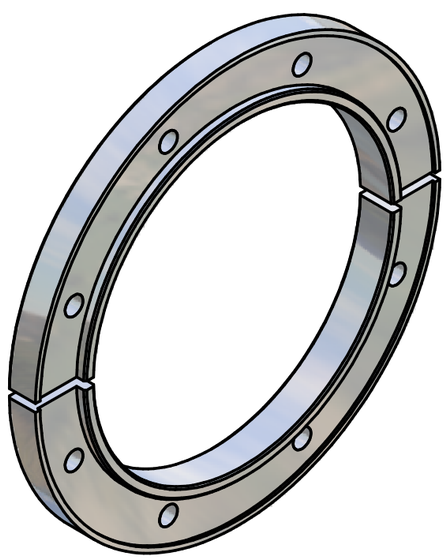

Issued all design changes as Rev C (TIO) - 4/19/07 - SAB

						Rev. C
					Scale : 1:1	mat: Stainless Steel, 304
					ASSEMBLY : *75 kW CW Input Coupler*	
				Date	Name	DESIGNATION :
			Drawn	10/5/04	Churanov	CLAMPING RING
			Checked	08-06-05	VM	
			Standard			
						100.600.001 — 1 — A3
State	Changes	Date	Name			